SQUARE PERFECT

MAKE EVERY PICTURE PERFECT

LED Light Cube

16", 24", 28" & 31"

Copyright © 2015 Square Perfect. All rights reserved.

Square Perfect LED Light Cube

Thank you for your purchase of the 1080, 1085, 1090 or 1095 LED Light Cube. This manual has been written to help you with the assembly, operating procedures and accessories. Square Perfect's LED Light Cubes are manufactured with the finest material available. Your LED lights and tent will provide many years of quality service with proper care and handling.

Please read this manual carefully before use, and keep it handy for reference during break down of equipment. Please read and heed all safety precautions listed in this manual. For ordering spare bulbs or replacement parts, contact us at info@squareperfect.com. Also check out our extended line of photo equipment now available.

What's included:

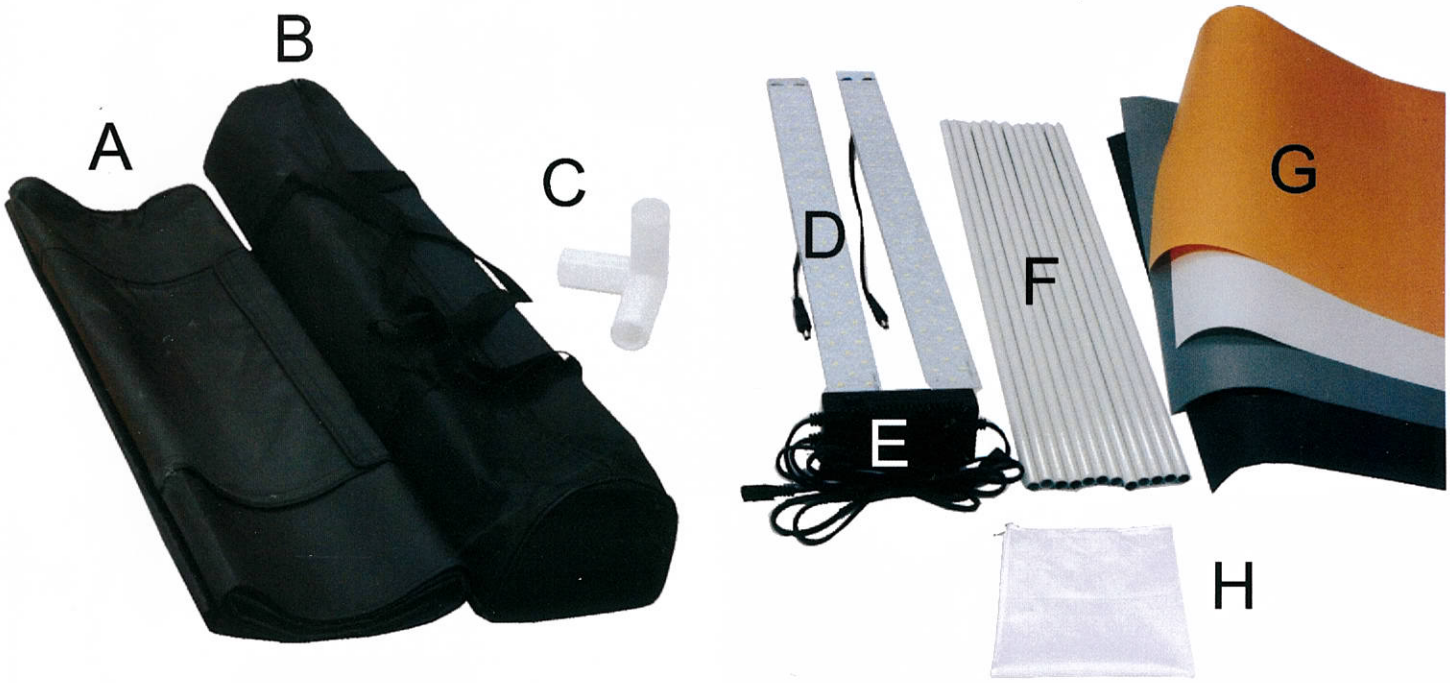

A) Light Tent
B) Carry Bag
C) Corner Pieces (8)
D) LED Light Bars (2)
E) Power Supply
F) Frame Tubes (12)
G) Backdrops (4 - Black, Gray, White, Tan)
H) Soft Background (1)

Copyright © 2015 Square Perfect. All rights reserved.

LED Light Cube Assembly

A.Frame Assembly:

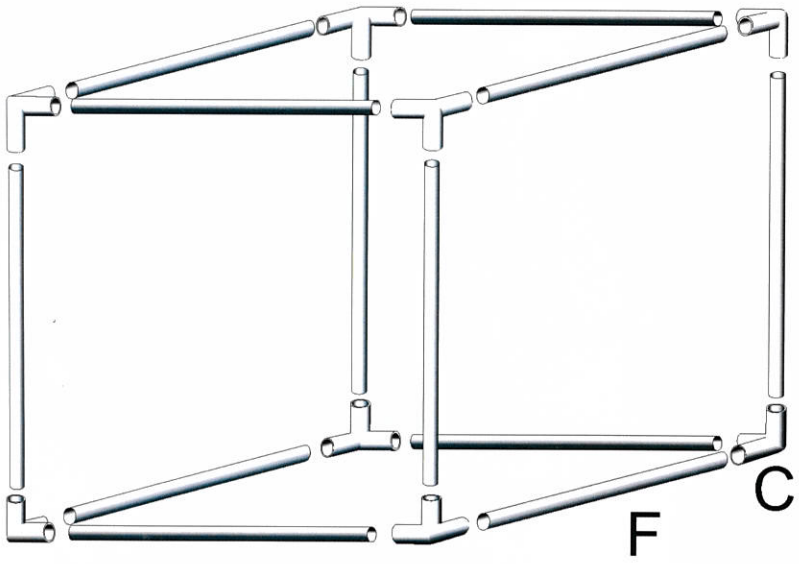

Figure 1

Assemble the cube frame using 12 frame tubes (F) and 8 corner pieces (C) as shown in **Figure 1**. Ensure all of the frame tubes are completely seated into the corner pieces as it will be critical in order for the light tent to fit over the frame properly.

See **Figure 2.**

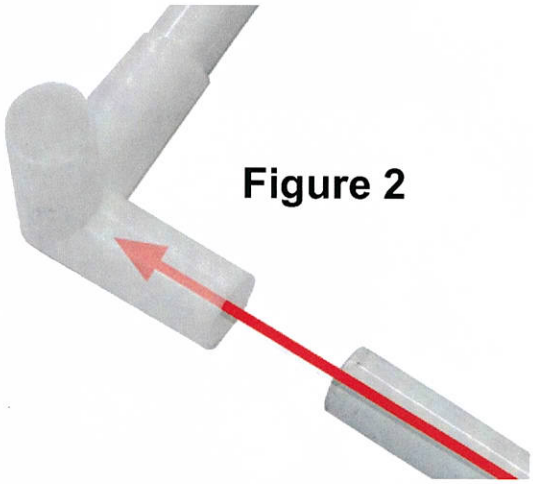

Figure 2

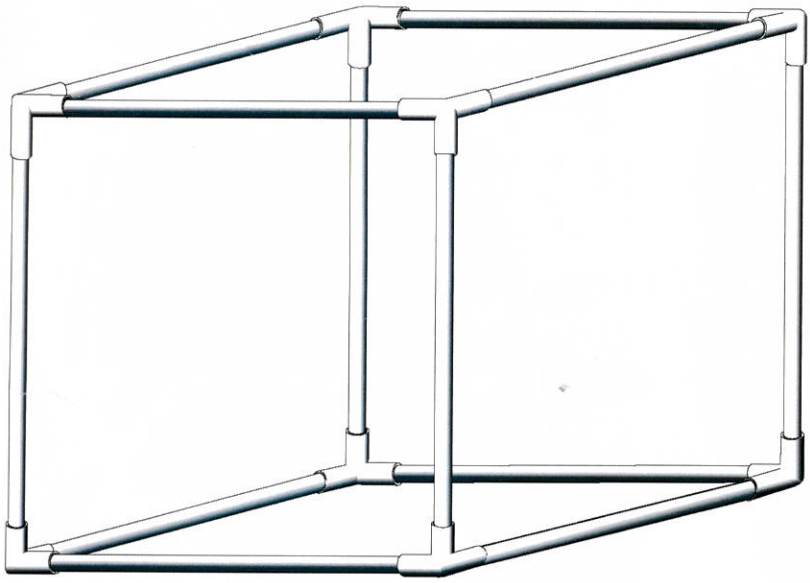

Figure 3

When the framework is finished it should look like **Figure 3.** It is now ready to be covered with the tent.

SQUARE PERFECT

www.squareperfect.com

Copyright © 2015 Square Perfect. All rights reserved.

B. Photo Tent Assembly:

1) Open up the tent (A) and push the cube frame into the tent completely. See **Figure 4.**

Figure 4

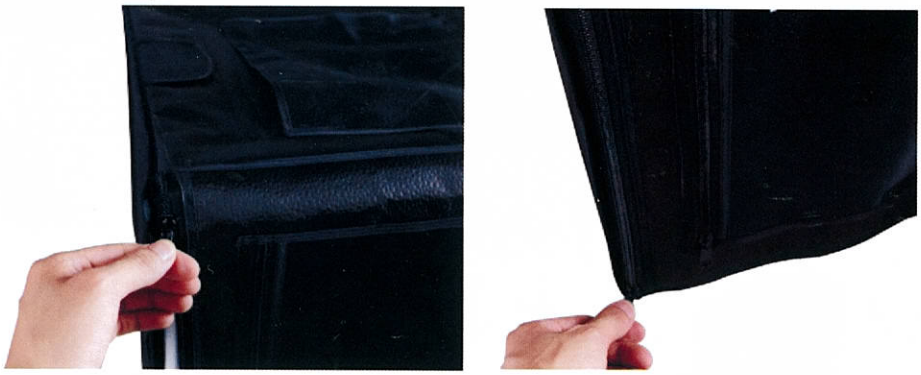

Figure 5

2) Close the two zippers on each side of the cube. See **Figure 5 .**

The Photo tent completely assembled and ready for the light bar installation. See **Figure 6.**

Figure 6

Copyright © 2015 Square Perfect. All rights reserved.

C. LED Light Bars Assembly:

1) The photo tent comes with two metal strips on the top that will hold the magnetic light bars in place. You can put one or more light bars on these strips, or for more versatility you can attach the light bars to any of the frame pieces. Experiment with the placing of the light bars to get the best lighting for your subject. See **Figure 7**.

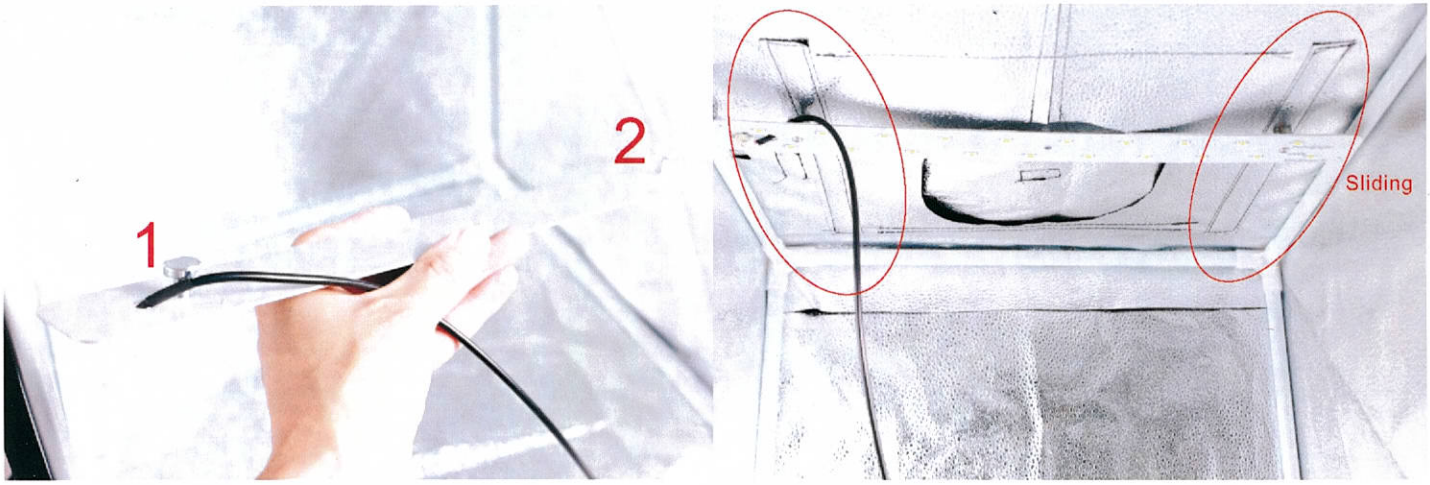

Figure 7

2) Feed the LED Light bar power cords through the small flap on the left hand top side of the light tent, see **Figure 8**. Pull as much of the power cord through the opening as possible in order to minimize the possibility of having cord visible in your pictures.

Figure 8

Copyright © 2015 Square Perfect. All rights reserved.

3) Once the wires are fished through the tent opening it is time to hook up the power.

NOTE: Do not connect the Power Supply to your power outlet at this time.

Caution: The light bars are very bright. Do not look directly at the illuminated light bar for prolonged periods of time when the light bar is lit.

Connect both LED Light Bars (D) to the Power Supply (E). Ensure that the connectors are seated completely to ensure proper operation. See **Figure 9.**

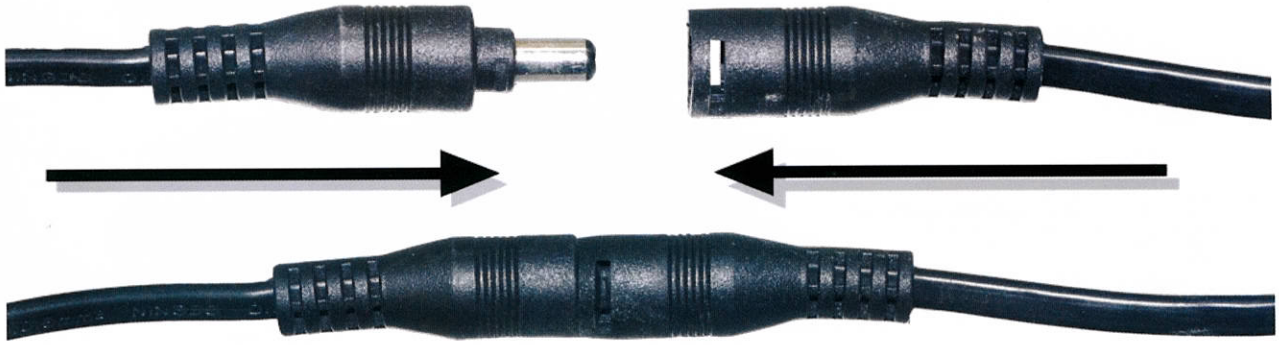

Figure 9

3) You may now plug the power pack into a 110V outlet. The lights are controlled by the On/Off switch located on the power cord. See **Figure 10.**

Figure 10

Copyright © 2015 Square Perfect. All rights reserved.

D. Installing the Backdrop:

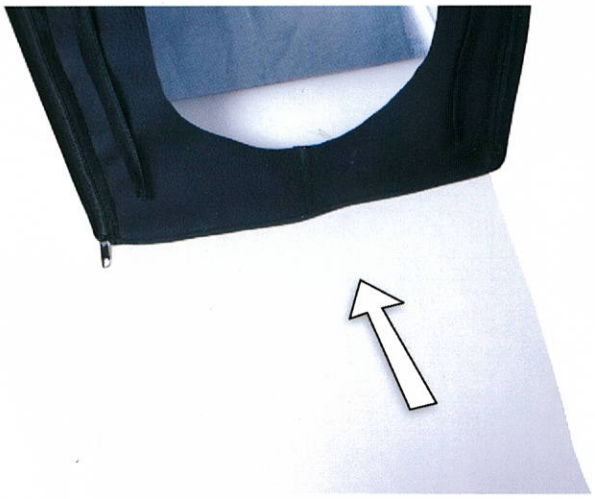

Figure 11

1) Included in your kit are four vinyl backdrops (G) . Choose the one you would like to start with and begin by sliding the backdrop under the bottom front frame tube (**Figure 11).** Continue sliding the backdrop so that the vinyl curves up the back side of the tent. Stop when 1/2" to 1/4" of the backdrop remains under the front frame tube **(Figure 12)**.

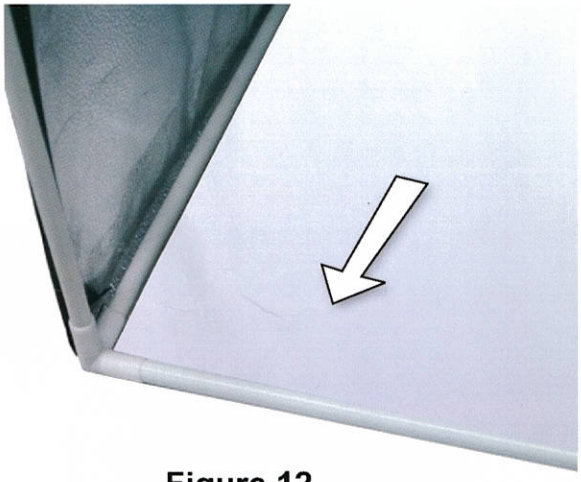

Figure 12

2) **DO NOT** slide the backdrop behind the bottom back frame tube as you do not want this tube showing in your pictures. Flatten out the vinyl and push it upwards along the back of the tent. Fit the backdrop behind the top frame tube to hold it in place **(Figure 13/14)**. This takes a little finesse but once in place the tension between the frame tube and the tent will hold it in place.

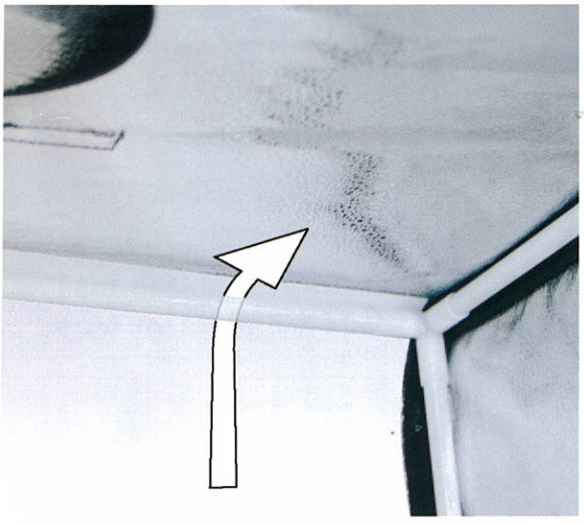

Figure 13

Figure 14

Copyright © 2015 Square Perfect. All rights reserved.

E. Using Your LED Light Cube:

Your Light Cube comes with a soft background that will clip to the cube frame, offering you a soft background option, or if draped over the LED's it will diffuse the light, giving you even more lighting options. See **Figure 15.**

Figure 15

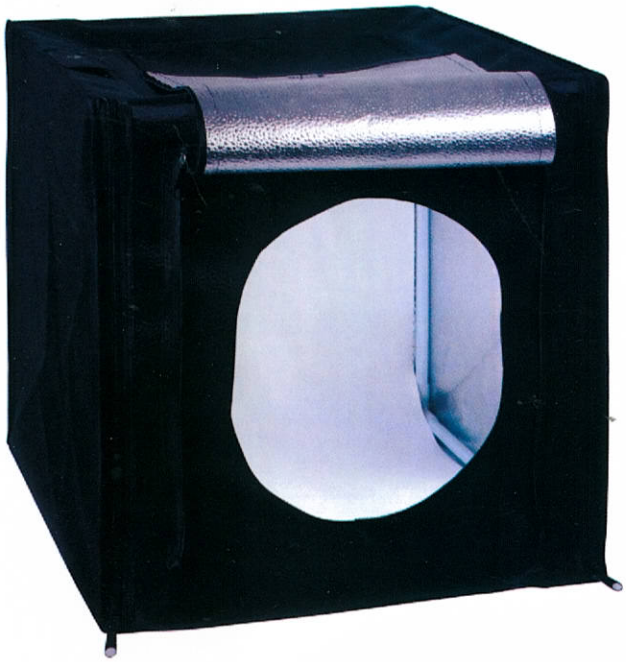

SUGGESTIONS: Experiment with laying one or both light bars along the sides, or use string or ties to hang them along the sides or front edges of the cube. Remember to keep the light bars out of the "shot" when taking your pictures.

You are now ready to start taking awesome pictures and impress anyone that sees what you can now do with your LED Light Tent. Your auctions will sell more, your social media will never look better!

SQUARE PERFECT

www.squareperfect.com

Copyright © 2015 Square Perfect. All rights reserved.